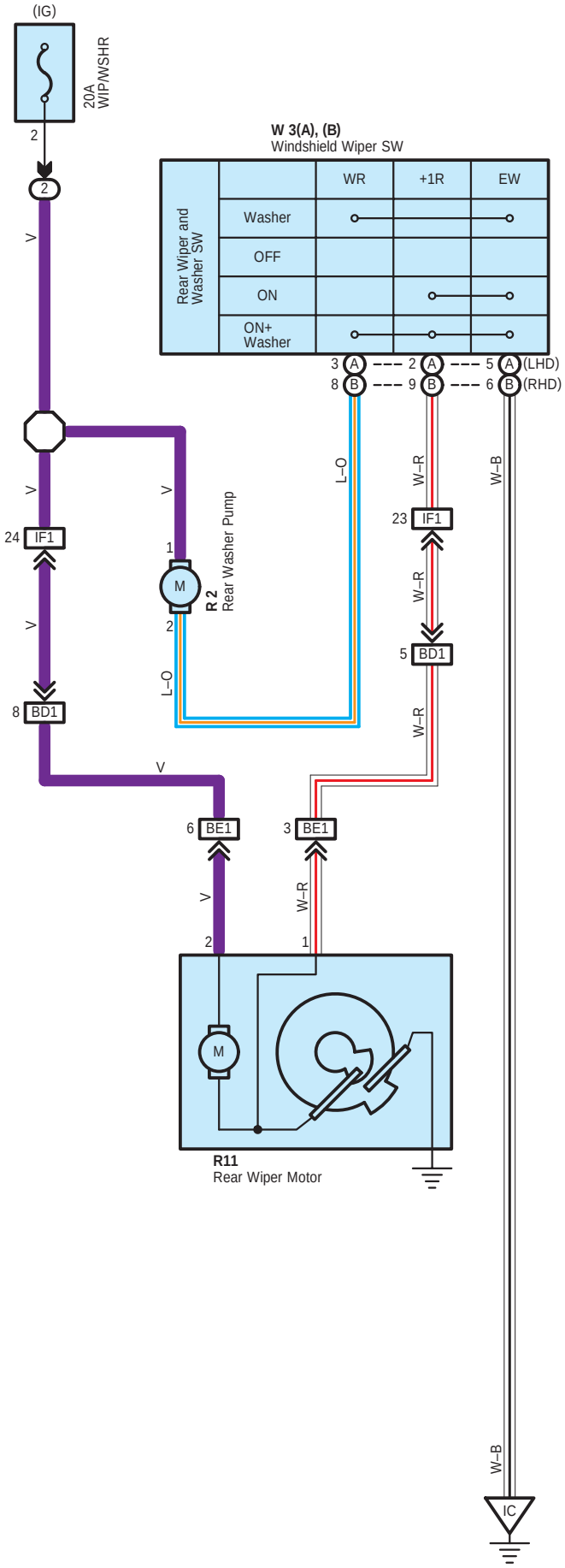
(IG)
20A
WIP/WSHR
2
W 3(A), (B)
Windshield Wiper SW
Rear Wiper and Washer SW
WR
+1R
EW
Washer
OFF
ON
ON+ Washer
3 A
8 B
2 A
9 B
5 A (LHD)
6 B (RHD)
V
24 IF1
8 BD1
1
M
2
R 2
Rear Washer Pump
L–O
W–R
23 IF1
5 BD1
W–B
6 BE1
3 BE1
1
M
R11
Rear Wiper Motor
IC

○ : **Parts Location**

Code	See Page	Code	See Page	Code		See Page
R2	25 (*1)	R2	35 (*4)	W3	A	29 (LHD)
	27 (*2)	R11	31 (LHD)		B	37 (*5)
	33 (*3)		41 (RHD)			39 (*6)

⬭ : **Relay Blocks**

Code	See Page	Relay Blocks (Relay Block Location)
2	23 (LHD)	Fuse Block (Left Kick Panel)
	23 (RHD)	Fuse Block (Right Kick Panel)

▭ : **Connector Joining Wire Harness and Wire Harness**

Code	See Page	Joining Wire Harness and Wire Harness (Connector Location)
IF1	44 (LHD)	Instrument Panel Wire and Floor Wire (Left Kick Panel)
	48 (*5)	Instrument Panel Wire and Floor Wire (Right Kick Panel)
	49 (*6)	
BD1	45 (LHD)	Back Door No.2 Wire and Floor Wire (Rear Quarter Panel RH)
	50 (RHD)	
BE1	45 (LHD)	Back Door No.2 Wire and Back Door No.1 Wire (Right Side of Back Door)
	50 (RHD)	

▽ : **Ground Points**

Code	See Page	Ground Points Location
IC	44 (LHD)	Cowl Side Panel LH
	48 (*5)	Right Kick Panel
	49 (*6)	

* 1 : LHD 3SZ–VE * 2 : LHD K3–VE * 3 : RHD 3SZ–VE * 4 : RHD K3–VE * 5 : RHD w/ Heater * 6 : RHD w/o Heater